STANDARD EQUIPMENT

ISO Standard cabin
- All-weather steel cab with 360° visibility
- Safety glass windows
- Rise-up type windshield wiper
- Sliding fold-in front window
- Sliding side window(LH)
- Lockable door
- Hot & cool box
- Storage compartment & Ashtray
- Cabin roof-steel cover
- Radio & USB player
- 12 volt power outlet (24V DC to 12V DC converter)
- Handsfree mobile phone system with USB
- Sun visor

Cabin FOPS/FOG (ISO/DIS 10262)
- FOPS (Falling Object Protective Structure)
- FOG (Falling Object Guard)

Cabin lights

Computer aided power optimization (New CAPO) system
- 3-power mode, 2-work mode, User mode
- Auto deceleration & one-touch deceleration system
- Auto warm-up system
- Auto overheat prevention system

Automatic climate control
- Full automatic temperature controller
- Defroster

Self-diagnostics system

Starting Aid (air grid heater) for cold weather

Centralized monitoring
- LCD display
- Engine speed or Trip meter/Accel.
- Clock
- Gauges
- Fuel level gauge
- Engine coolant temperature gauge
- Hyd. oil temperature gauge
- Warnings
- Check engine
- Overload
- Communication error
- Low battery
- Air cleaner clogging
- Indicators
- Max power
- Low speed/High speed
- Fuel warmer
- Auto idle

Two outside rearview mirrors

Fully adjustable suspension seat with seat belt

Pilot-operated slidable joystick

Console box height adjust system

Six front working lights, two rear lights

Electric horn

Batteries (4 x 12V x 160 AH)

Battery master switch

Removable clean-out dust net for cooler

Automatic swing brake

Automatic fuel line deaeration

Fuel pre-filter with fuel warmer

Boom holding system

Arm holding system

Track shoes (700mm, 28")

Full track rail guard

Accumulator for lowering work equipment

Electric transducer

Lower frame under cover

Viscous fan clutch

Travel alarm

OPTIONAL EQUIPMENT

Fuel filler pump (50 L/min)

Beacon lamp

Booms
- (7.55m, 24' 9")

Arms
- (3.40m, 11' 2")

Climate control
- Air conditioner only
- Heater only

Cabin front window rain guard

Track shoes
- Double grousers shoe (800mm, 32")
- Double grousers shoe (900mm, 36")

Pre-heating system, coolant

Tool kit

Operator suit

Rearview camera

Seat
- Mechanical suspension seat
- Air-suspension seat with heater
- Air-suspension seat

Automatic lubrication

Cabin guard - Front
- Wire net
- Fine net

Hi-mate (Remote Management System)

* Standard and optional equipment may vary. Contact your Hyundai dealer for more information. The machine may vary according to International standards.
* The photos may include attachments and optional equipment that are not available in your area.
* Materials and specifications are subject to change without advance notice.
* All imperial measurements rounded off to the nearest pound or inch.

PLEASE CONTACT

www.hyundai-ce.com 2011.11 Rev.0

HYUNDAI HEAVY INDUSTRIES CO.,LTD.

CONSTRUCTION EQUIPMENT

Head Office (Sales Office)
1 JEONHA-DONG, DONG-GU, ULSAN, KOREA **TEL:** (82) 52-202-7970, 7729, 0971 FAX: (82) 52-202-7979, 7720

Americas Operation: Hyundai Construction Equipment Americas, Inc.
6100 ATLANTIC BOULEVARD NORCROSS GA 30071 U.S.A **TEL:** (1)847-678-823-7802 FAX: (1)847-678-823-7778

Europe Operation: Hyundai Heavy Industries Europe N.V.
VOSSENDAAL 11, 2440 GEEL, BELGIUM **TEL:** (32) 14-56-2200 FAX: (32) 14-59-3405

India Operation: Hyundai Construction Equipment India Pvt., Ltd.
PLOT NO.A-2, CHAKAN INDUSTRIAL AREA, VILL.- KHALUMBRE. TALUK.- KHED., DIST.- PUNE 410 501, INDIA
TEL: (91) 21-3530-1700 FAX: (91) 21-3530-1712

We build a better future

Robex 1200-9

With Tier 2 Engine installed

*Photo may include optional equipment.

HYUNDAI HEAVY INDUSTRIES CO.,LTD.

Pride at Work

Hyundai Heavy Industries strives to build state-of-the art earthmoving equipment to give every operator maximum performance, more precision, versatile machine preferences, and proven quality. Take pride in your work with Hyundai!

Robex 1200-9

*Photo may include optional equipment.

Machine Walk-Around

Engine Technology

Proven / reliable, fuel efficient Cummins Tier II QSK23-C engine
Electronically controlled for optimum fuel to air ratio and clean, efficient combustion
Low noise / Auto engine overheat feature / Anti-restart feature

Hydraulic System Improvements

New patented hydraulic control for improved controllability / Improved control valve design for added efficiency and smoother operation / New auto boom and swing priority system for optimum speed / New auto power boost feature for additional power when needed / Improved arm-in and boom-down flow regeneration system for added speed and efficiency

Pump Compartment

Industry-leading, powerful, reliable Kawasaki designed, variable volume in-line axial piston pumps
New compact solenoid block equipped with 4 solenoid valves, 1 EPPR valve, 1 check valve accumulator and pilot filter - controls 2 speed travel, power boost, boom priority, safety lock

Enhanced Operator Cab

Improved Visibility
Enlarged cab with improved visibility / See-through upper skylight for visibility and ventilation
Larger right-side glass, now one piece, for better right visibility
Safety glass windows on all sides - less expensive than (polycarbonate) and won't scratch or fade
Closeable sunshade for operator convenience / Reduced front window seam for improved operator view

Improved Cab Construction
New steel tube construction for added operator safety, protection and durability
New window open/close mechanism designed with cable and spring lift assist and single latch release

Improved Suspension Seat / Console Assembly
Ergonomic joysticks with auxiliary control buttons for attachment use. Now with new sleek styling
Heated suspension (standard) or optional air ride suspension with heat
New joystick consoles - now adjustable in height by way of dial at bottom
Adjustable arm rests - turn dial to raise or lower for optimum comfort

Advanced 7" Color Cluster
New Color LCD Display with easy to read digital gauges for hydraulic oil temperature, water temperature, and fuel. Simplified design makes adjustment and diagnostics easier. Also, new enhanced features such as rear-view camera are integrated into monitor.
3 power modes : (P) Power, (S) Standard, (E) Economy, and (U) User mode for operator preference
Enhanced self-diagnostic features with GPS download capability
New anti-theft system with password capability
Boom speed and arm regeneration are selectable through the monitor.
Auto power boost is now available - selectable (on/off) through the monitor.
Powerful air conditioning and heat with auto climate control, 20% more heat and air output than 7A series!
RMS (Remote Management System) works through GPS/satellite technology to ultimately provide better customer service and support.

Undercarriage

Sealed track chain (urethane seals) / Standard full track rail guard / Comfortable bolt-on steps
Large upper roller cut-outs for debris clean-out / Tapered side frames for debris clean-out / Grease-type track tensioner

Preference

Operating a 9 series is unique to every operator. Operators can fully customize their work environment and operating preferences to fit their individual needs.

*Photo may include optional equipment.

Wide Cabin with Excellent Visibility

The newly designed cabin was conceived for more space, a wider field of view and operator comfort. Single piece right side glass improves visibility and operator comfort. Plus, the front defrosting system provides more comfortable working condition. Special attention was given to a clear, open and convenient interior with plenty of visibility on the machine surroundings and the job at hand. This well balanced combination of precision aspects put the operator in the perfect position to work safely and securely.

Operator Comfort

In 9 series cabin you can easily adjust the seat, console and armrest settings to best suit your preferred comfort level. Other preference settings that add to overall operator comfort include the full automatic high capacity air conditioning system, transparent polycarbonate glass sun roof, large and easy to control sun visor, and radio / USB player.

Reduced Stress

Work is stressful enough. Your work environment should be stress free. Hyundai's 9 series provides improved cab amenities, additional space and a comfortable seat to minimize stress to the operator. The powerful climate control system and the optimized vent positions provide the operator with optimum air temperature. An advanced audio system with USB player, AM/FM stereo, plus remotely located controls is perfect for listening to music favorites. Operators can even talk on the phone with the hands-free cell phone feature.

Operator - Friendly Cluster

The advanced new cluster with 7 inch wide color LCD screen and toggle switch allows the operator to select his personal machine preferences. Power and work mode selection, self diagnostics, optional rear-view camera, maintenance check lists, start-up machine security, and video functions were integrated into the cluster to make the machine more versatile and the operator more productive.

Precision

Innovative hydraulic system technologies make the 9 series excavator fast, smooth and easy to control.

*Photo may include optional equipment.

Computer Aided Power

The engine horsepower and hydraulic horsepower together in unison through the advanced CAPO(Computer Aided Power Optimization) system, flow for the job at hand. Operator can set their own preferences for boom or swing priority, power mode selection and optional work tools at the touch of a button.
The CAPO system also provides complete self diagnostic features and digital gauges for important information like hydraulic oil temperature, water temperatures and fuel level. This system interfaces with multiple sensors placed throughout the hydraulic system as well as the electronically controlled engine to provide the optimum level of engine power and hydraulic flow.

Power Mode

P (Power Max) mode maximizes machine speed and power for mass production.
S (Standard) mode provides a reduced, fixed rpm for optimum performance and improved fuel economy. For maximum fuel savings and improved control, E (Economy) mode provides precise flow and engine power based on load demand. Three unique power modes provide the operator with custom power, speed and fuel economy.

User Mode

Some jobs require more precise machine settings. Using the versatile U (User) mode, the operator can customize engine speed, pump output, idle speed and other machine settings for the job at hand.

Improved Hydraulic System

To achieve optimum precision, Hyundai redesigned the hydraulic system to provide the operator with super fine touch and improved controllability. Improved pump flow control reduces flow when controls are not being used to minimize fuel consumption.
Improved spool valves in the control valve are engineered to provide more precise flow to each function with less effort.
Improved hydraulic valves, precision-designed variable volume piston pumps, fine-touch pilot controls, and enhanced travel functions make any operator running a 9 series look like a smooth operator. Newly improved features include arm-in and boom-down flow regeneration, improved control valve technology and innovative auto boom and swing priority for optimal performance in any application.

Auto Boom-swing Priority

This smart function automatically and continuously looks the ideal hydraulic flow balance for the boom and swing motions of the machine. The advanced CAPO system monitors the hydraulic system and adjusts its settings to maximize performance and productivity.

Performance

9 series is designed for maximum performance to keep the operator working productively.

*Photo may include optional equipment.

Excellent Reliability and Durability

Durable full track rail guards keep track links in place. Track adjustment is made easy with standard grease cylinder track adjusters and shock absorbing springs.
The strengthened undercarriage is designed for excellent production at quarries and mines. R1200-9 is equipped with covers to protect the travel motors and hoses against damage from rocks.

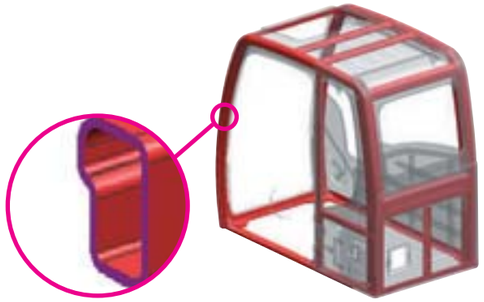

Structure Strength

The 9 series cabin structure has been fitted with stronger but slimmer tubing for more safety and improved visibility. Low-stress, high strength steel is integrally welded to form a stronger, more durable upper and lower frame. Structural integrity was tested by way of FEM (Finite Elements Method) analysis and long-term durability tests.

CUMMINS QSK23-C Engine

The Tier II compliant, six cylinder, turbo-charged, 4 cycle, water cooled, Cummins QSK23-C diesel engine is built for power, reliability, efficiency and reduced emissions.

Heavy-duty strength

The QSK23-C combines rugged productivity with a high power density and advanced engine management technology to deliver the lowest operating cost per ton of any mining engine in its class.
Its high-pressure injection (HPI) fuel system (up to 29,000 psi / 200,000 kPa) results in more complete combustion for superior engine response across the entire power curve and the lowest fuel consumption in its class. Its compact and balanced inline six-cylinder design and proven durability in the toughest mine sites make it a great choice to repower vee engines of similar displacement.
The one-piece Ferrous Cast Ductile (FCD) iron pistons and robust cylinder head work to improve long-term durability and dependability. A one-piece cast-iron block, forged-steel crankshaft and a large-diameter camshaft ensure long, reliable performance between overhauls, with the capability of multiple rebuild cycles.

Profitability

9 series is designed to maximize profitability through improved efficiencies, enhanced service features and longer life components.

*Photo may include optional equipment.

Easy Access

Concentrated engine filters, remote type fuel pre-filter and fuel cut valve, and wide open compartments make service more convenient. The auto greasing system at the touch of a button provides simple and easy maintenance.

Hi-mate (Remote Management System)

Hi-mate, Hyundai's proprietary remote management system, provides operators and dealer service personnel access to vital service and diagnostic information on the machine from any computer with internet access. Users can pinpoint machine location using digital mapping and set machine work boundaries, reducing the need for multiple service calls. Hi-mate saves time and money for the owner and dealer by promoting preventative maintenance and reducing machine downtime.

Enhanced Safety

Variable cabin guards offer enhanced operator safety. And the work lamps on the cab improved operator convenience at night time. Wide cat-walks, large handrails and anti-slip plates provide easy access to the cab and safer maintenance.

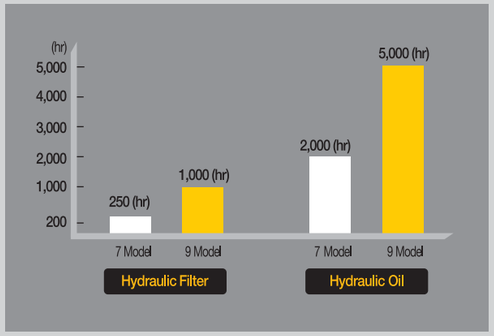

Extended Life Components

9 series excavators were designed with bushings designed for extended lube intervals (250 hrs) & polymer shims (wear resistant, noise reducing), extended-life hydraulic filters (1,000hrs), long-life hydraulic oil (5,000hrs), more efficient cooling systems and integrated preheating systems which extend service intervals, minimize operating costs and reduce machine downtime.

Specifications

ENGINE

MODEL			CUMMINS QSK23-C
Type			Water-cooled, 4-cycle Diesel, 6-Cylinder in-line, Direct injection, Turbocharged, Charger air cooled, Low emission
Rated flywheel horsepower	SAE	J1995 (gross)	760HP (567kW)/ 1,800rpm
		J1349 (net)	740HP (552kW)/ 1,800rpm
	DIN	6271/1 (gross)	771PS (567kW)/ 1,900rpm
		6271/1 (net)	750PS (552kW)/ 1,800rpm
Max. torque			353.7kgf·m (2,558 lbf·ft) / 1,350rpm
Bore X stroke			170mm X 170mm (6.69" X 6.69")
Piston displacement			23,000cc (1,404 in³)
Batteries			4 X 12V X 160AH
Starting motor			2 X24V, 7.5kW
Alternator			24V, 75Amp

HYDRAULIC SYSTEM

MAIN PUMP	
Type	Variable displacement axis piston pumps
Max. flow	2 X 490 L /min (129.4 US gpm / 107.8 UK gpm)
Sub-pump for pilot circuit	Gear pump

Cross-sensing and fuel saving pump system

HYDRAULIC MOTORS	
Travel	Two-speed axial pistons motor with brake valve and parking brake
Swing	Axial piston motor with automatic brake

RELIEF VALVE SETTING	
Implement circuits	320 kgf/cm² (4,550 psi)
Travel	350 kgf/cm² (4,980 psi)
Power boost (boom, arm, bucket)	350 kgf/cm² (4,980 psi)
Swing circuit	300 kgf/cm² (4,270 psi)
Pilot circuit	40 kgf/cm² (570 psi)
Service valve	Installed

HYDRAULIC CYLINDERS	
No. of cylinder bore X stroke	Boom : 230 X 2,165 (9.1" X 85.2")
	Arm : 260 X 2,180 mm (10.2" X 85.8")
	Bucket : 240 X 1,792 mm (9.4" X 70.6")

DRIVES & BRAKES

Drive method	Fully hydrostatic type
Drive motor	Axial piston motor, in-shoe design
Reduction system	Planetary reduction gear
Max. drawbar pull	70,200 kgf (154,800 lbf)
Max. travel speed (high / low)	3.2 km/hr (2.0 mph) / 2.3 km/hr (1.4 mph)
Gradeability	35° (70 %)
Parking brake	Multi wet disc

CONTROL

Pilot pressure operated joysticks and pedals with detachable lever provide almost effortless and fatigueless operation.

Pilot control	Two joysticks with one safety lever (LH): Swing and arm, (RH): Boom and bucket (ISO)
Traveling and steering	Two levers with pedals
Engine throttle	Electric, Dial type

SWING SYSTEM

Swing motor	Axial piston motor
Swing reduction	Planetary gear reduction
Swing bearing lubrication	Grease-bathed
Swing brake	Multi wet disc
Swing speed	5.6 rpm

COOLANT & LUBRICANT CAPACITY

Re-filling	liter	US gal	UK gal
Fuel tank	1,450.0	383.0	319.0
Engine coolant	50.0	13.2	11.0
Engine oil	63.0	16.7	13.9
Swing device - gear oil	8.0	2.1	1.8
Final drive (each) - gear oil	20.0	5.3	4.4
Hydraulic system (including tank)	1,160.0	306.4	255.2
Hydraulic tank	670.0	177.0	147.4

UNDERCARRIAGE

The X-leg type center frame is integrally welded with reinforced box-section track frames. The undercarriage includes lubricated rollers, idlers, track adjusters with shock absorbing springs and sprockets, and a track chain with double or triple grouser shoes.

Center frame	X-leg type
Track frame	Pentagonal box type
No. of shoes on each side	52
No. of carrier rollers on each side	3
No. of track rollers on each side	8
No. of rail guards on each side	2

OPERATING WEIGHT (APPROXIMATE)

Operating weight, including 7,550mm (24' 9") boom, 3,400mm (11' 2") arm, SAE heaped 6.7m³ (8.76 yd³) bucket, lubricant, coolant, full fuel tank, full hydraulic tank, and all standard equipments.

MAJOR COMPONENT WEIGHT	
Upperstructure	11,960kg (26,370lb)
Boom (with arm cylinder)	11,900kg (26,230lb)

OPERATING WEIGHT			
Shoes		Operating weight	Ground pressure
Type	Width mm (in)	kg (lb)	kgf/cm² (psi)
Double grouser	700 mm (28")	118,000 (260,140)	1.51 (21.47)
	800 mm (32")	118,110 (260,390)	1.34 (19.05)
	900 mm (36")	118,220 (260,630)	1.19 (16.92)

BUCKET

bucket is welded with high-strength steel.

		Capacity m³ (yd³)		Width mm (in)		Weight kg (lb)	Recommendation mm (ft·in)
		SAE heaped	CECE heaped	Without sidecutters	With sidecutters		7,550(24' 9")Boom / 3,400(11' 2")Arm
SAE heaped m³ (yd³)	6.7 (8.76)	6.70 (8.76)	5.88 (7.69)	2,390 (94.1)	-	5,864 (12,930)	■

● : Applicable for materials with density of 2,000 kg /m³ (3,370 lb/ yd³) or less
■ : Applicable for materials with density of 1,600 kg /m³ (2,700 lb/ yd³) or less
▲: Applicable for materials with density of 1,100 kg /m³ (1,850 lb/ yd³) or less

ATTACHMENT

Boom and arm are welded with a low-stress, full-box section design. 7,550mm(24' 9")boom and 3,400mm(11' 2")arm are available.

DIGGING FORCE

Boom	Length	mm (ft·in)	7,550 (24' 9")	Remarks
	Weight	kg (lb)	10,310 (22,730)	
Arm	Length	mm (ft·in)	3,400 (11' 2")	
	Weight	kg (lb)	4,005 (8,830)	
Bucket digging force	SAE	kN	511.9 [558.5]	[ ]: Power Boost
		kgf	52,200 [56,950]	
		lbf	115,080 [125,540]	
	ISO	kN	581.5 [634.4]	
		kgf	59,300 [64,690]	
		lbf	130,730 [142,610]	
Arm crowd force	SAE	kN	423.7 [462.2]	
		kgf	43,200 [47,130]	
		lbf	95,240 [103,900]	
	ISO	kN	429.5 [468.6]	
		kgf	43,800 [47,780]	
		lbf	96,560 [105,340]	

Note: Boom weight includes arm cylinder, piping, and pin
Arm weight includes bucket cylinder, linkage, and pin

Dimensions & Working Range

R1200-9 DIMENSIONS

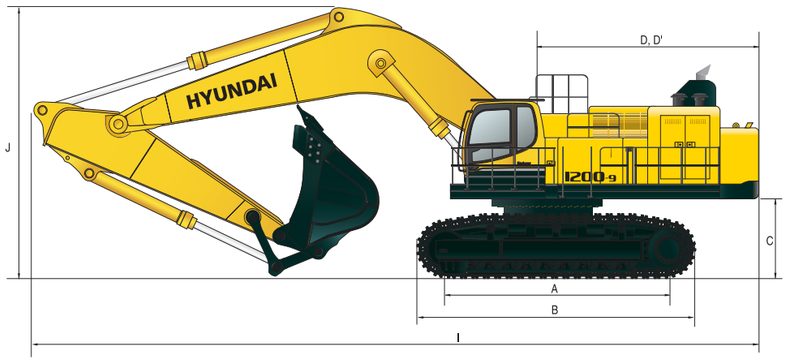

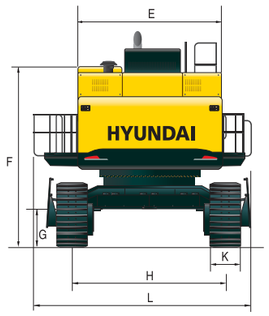

mm (ft·in)

A	Tumbler distance	5,010 (16' 5")
B	Overall length of crawler	6,400 (20' 12")
C	Ground clearance of counterweight	1,825 (5' 12")
D	Tail swing radius	4,870 (15' 12")
D'	Rear-end length	4,805 (15' 9")
E	Overall width of upperstructure	3,520 (11' 7")
F	Overall height of cab	4,250 (13' 11")
G	Min. ground clearance	990 (3' 3")
H	Track gauge	3,900 (12' 10")

mm (ft·in)

	Boom length	7,550 (24' 9")
	Arm length	3,400 (11' 2")
I	Overall length	14,580 (47' 10")
J	Overall height of boom	6,210 (20' 4")
K	Track shoe width	700 (2' 4")
L	Overall width	5,560 (18' 3")

R1200-9 WORKING RANGE

mm (ft·in)

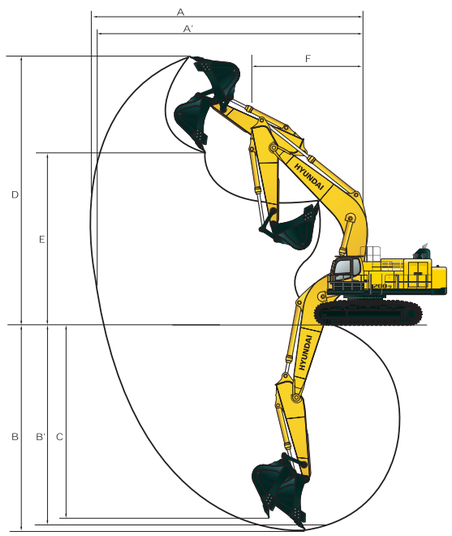

	Boom length	7,550 (24' 9")
	Arm length	3,400 (11' 2")
A	Max. digging reach	13,760 (45' 2")
A'	Max. digging reach on ground	13,380 (43' 11")
B	Max. digging depth	8,010 (26' 3")
B'	Max. digging depth (8' level)	7,840 (25' 9")
C	Max. vertical wall digging depth	5,230 (17' 2")
D	Max. digging height	12,420 (40' 9")
E	Max. dumping height	7,840 (25' 9")
F	Min. swing radius	6,550 (21' 6")

Lifting Capacity

R1200-9

Rating over-front Rating over-side or 360 degree

Boom : 7.55m (24' 9") / Arm : 3.40 m (11' 2") / Bucket : 6.70 m³ (8.76 yd³) SAE heaped / Shoe : 700mm (28") double grouser

Load point height m (ft)		Load radius												At max. reach		
		3.0 m (10 ft)		4.5 m (15 ft)		6.0 m (20 ft)		7.5 m (25 ft)		9.0 m (30 ft)		10.5 m (35 ft)		Capacity		Reach
																m (ft)
9.0 m	kg													*12990	*12990	11.22
(30 ft)	lb													*28640	*28640	(36.8)
7.5 m	kg									*19680	*19680	*6060	*6060	*12910	*12910	11.91
(25 ft)	lb									*43390	*43390	*13360	*13360	*28460	*28460	(39.1)
6.0 m	kg									*21470	*21470	*13680	*13680	*13160	12140	12.33
(20 ft)	lb									*47330	*47330	*30160	*30160	*29010	26760	(40.5)
4.5 m	kg					*36250	*36250	*27920	*27920	*22880	22750	*19250	16820	*13710	11340	12.53
(15 ft)	lb					*79920	*79920	*61550	*61550	*50440	50160	*42440	37080	*30230	25000	(41.1)
3.0 m	kg					*40020	*40020	*30110	29510	*24120	21540	*20020	16120	*14610	11030	12.52
(10 ft)	lb					*88230	*88230	*66380	65060	*53180	47490	*44140	35540	*32210	24320	(41.1)
1.5 m	kg					*41590	40030	*31330	27820	*24800	20470	*20170	15490	*15100	11210	12.28
(5 ft)	lb					*91690	88250	*69070	61330	*54670	45130	*44470	34150	*33290	24710	(40.3)
Ground	kg			*52630	*52630	*40870	38600	*31210	26690	*24590	19690	*19550	15010	*14600	11950	11.82
Line	lb			*116030	*116030	*90100	85100	*68810	58840	*54210	43410	*43100	33090	*32190	26350	(38.8)
-1.5 m	kg	*47300	*47300	*49630	*49630	*38120	38060	*29560	26110	*23150	19270			*13620	13510	11.08
(-5 ft)	lb	*104280	*104280	*109420	*109420	*84040	83910	*65170	57560	*51040	42480			*30030	29780	(36.4)
-3.0 m	kg	*52360	*52360	*42230	*42230	*33290	*33290	*26020	*26020	*19800	19280			*11570	*11570	10.01
(-10 ft)	lb	*115430	*115430	*93100	*93100	*73390	*73390	*57360	*57360	*43650	42510			*25510	*25510	(32.8)
-4.5 m	kg	*37090	*37090	*31790	*31790	*25700	*25700	*19620	*19620					*6850	*6850	8.43
(-15 ft)	lb	*81770	*81770	*70080	*70080	*56660	*56660	*43250	*43250					*15100	*15100	(27.7)
-6.0 m	kg					*13170	*13170									
(-20 ft)	lb					*29030	*29030									

1. Lifting capacity is based on SAE J1097, ISO 10567.
2. Lifting capacity of the Robex Series does not exceed 75% of the tipping load with the machine on firm, level ground or 87% of full hydraulic capacity.
3. The load point is a hook located on the back of the bucket.
4. (*) indicates the load limited by hydraulic capacity.